A1

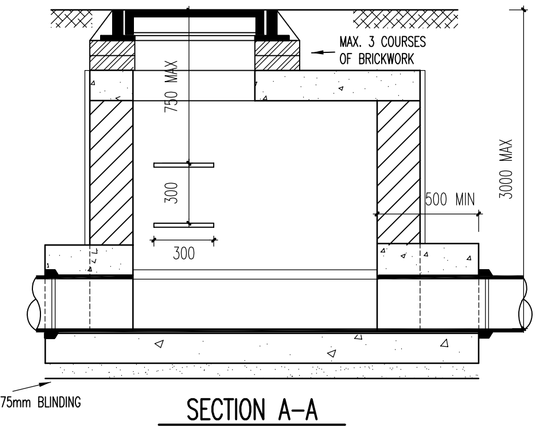

SECTION A–A

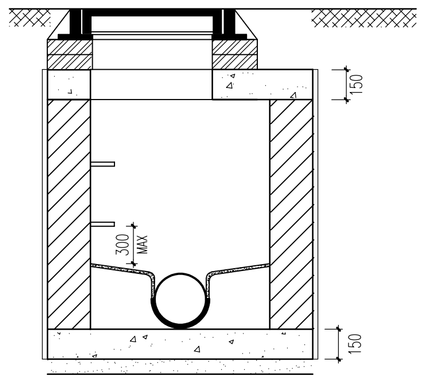

SECTION B–B

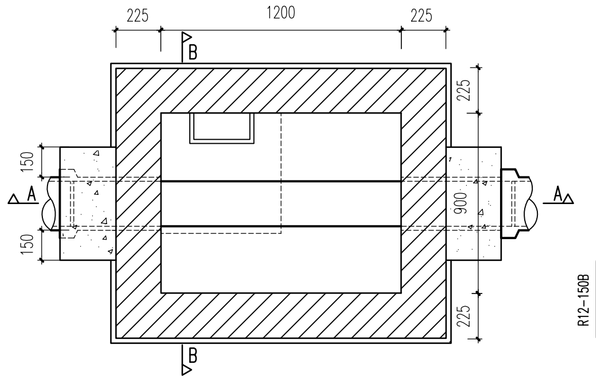

SECTIONAL PLAN

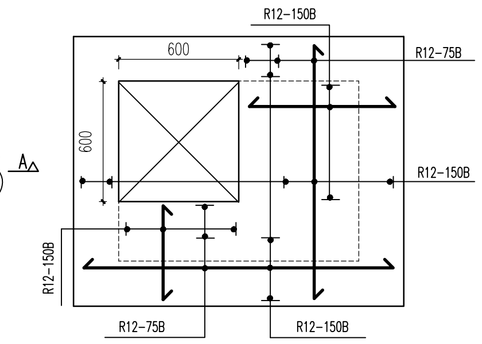

ROOF PLAN

SHALLOW MANHOLE (DEPTHS UP TO 3.00m) 1:20

(ON PIPES UP TO 300mm DIA.)

SD-MH01
SD-MH02

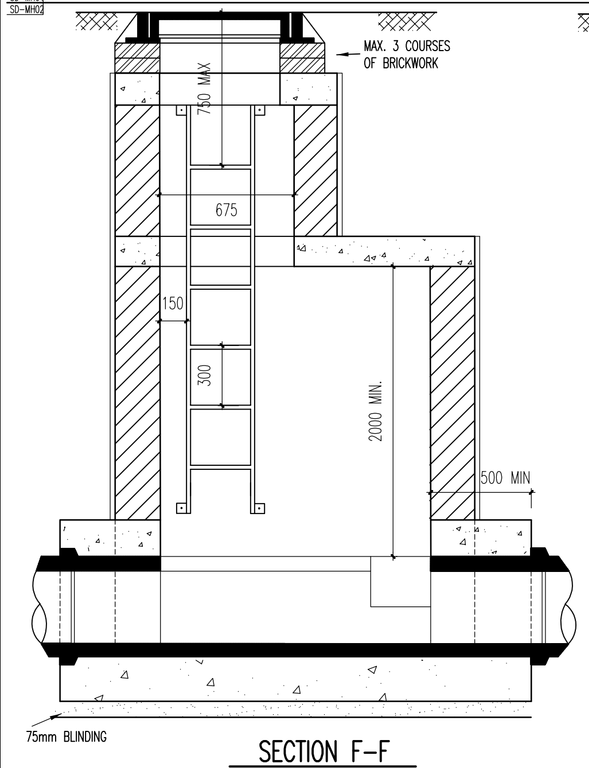

SECTION F–F

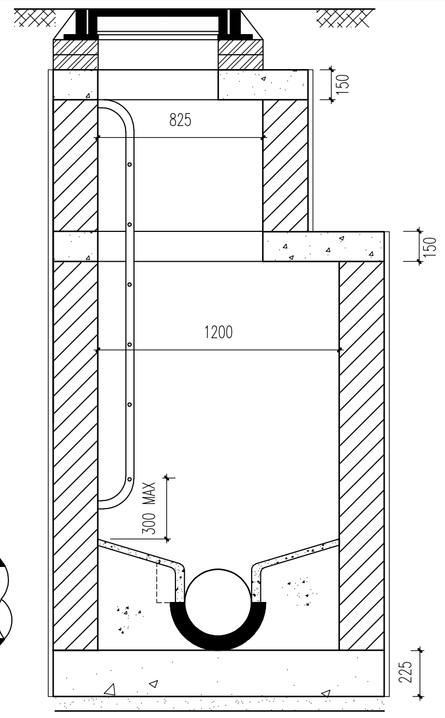

SECTION G–G

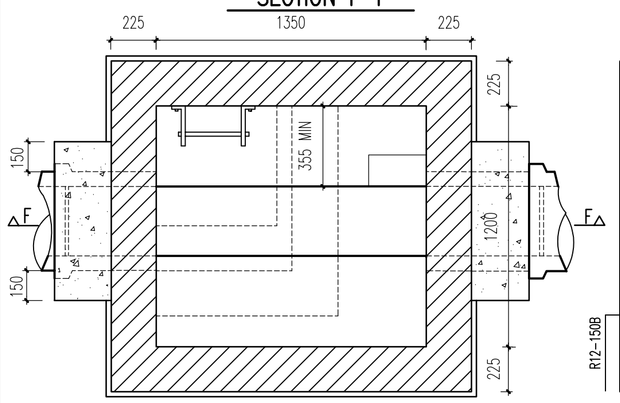

SECTIONAL PLAN

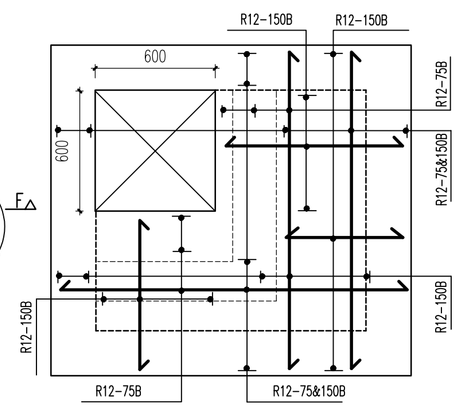

ROOF PLAN (SHOWING ROOF STEEL & SHAFT ROOF STEEL)

MANHOLE CHAMBER SIZES

PIPE DIA. mm	MANHOLE SIZE m
100–450	1350 x 1200
525–750	1350 x 1500

DEEP MANHOLES (DEPTHS OVER 3.0m) 1:20

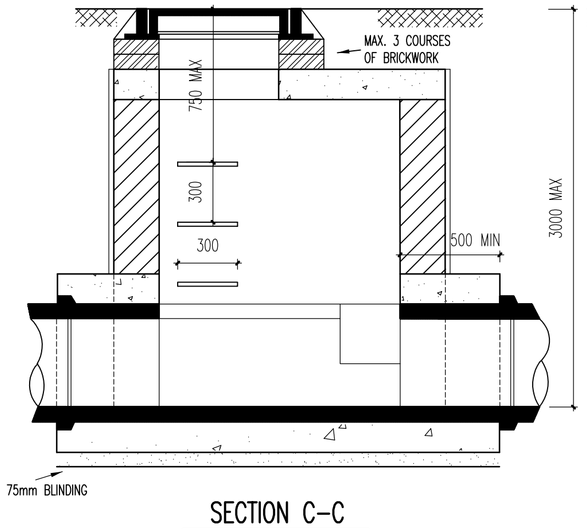

SECTION C–C

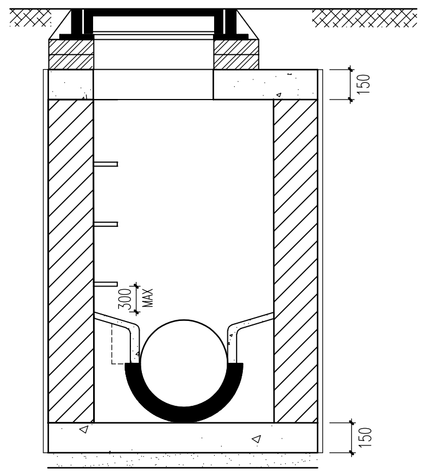

SECTION D–D

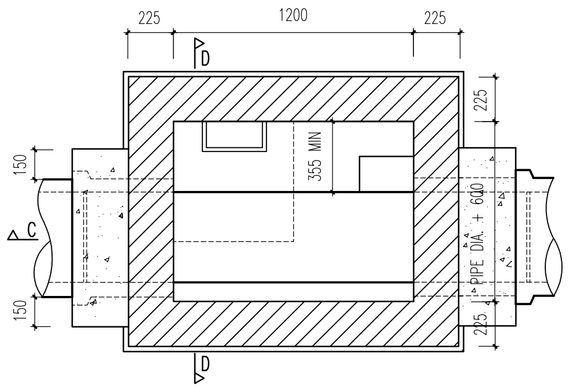

SECTIONAL PLAN

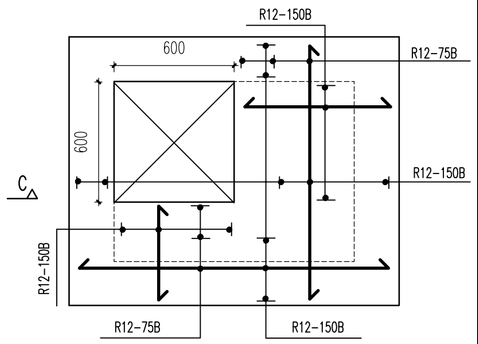

ROOF PLAN

SHALLOW MANHOLE (DEPTHS UP TO 3.0m) 1:20

(ON PIPES 375–600mm DIA.)

SD-MH03
SD-MH04

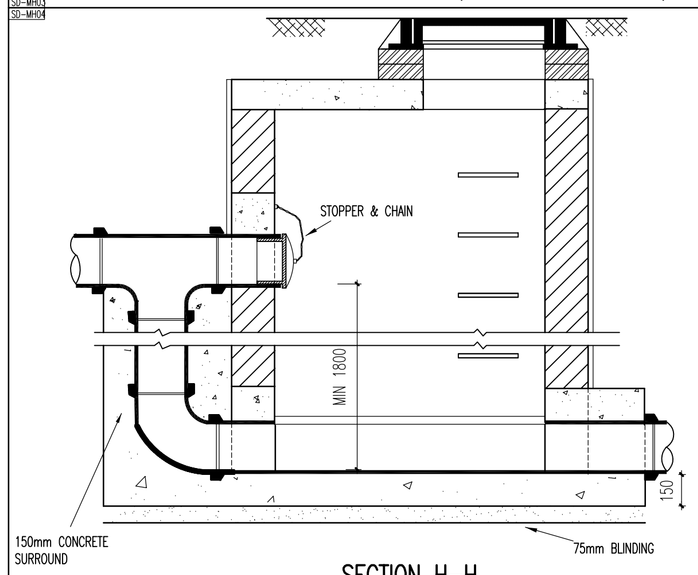

SECTION H–H

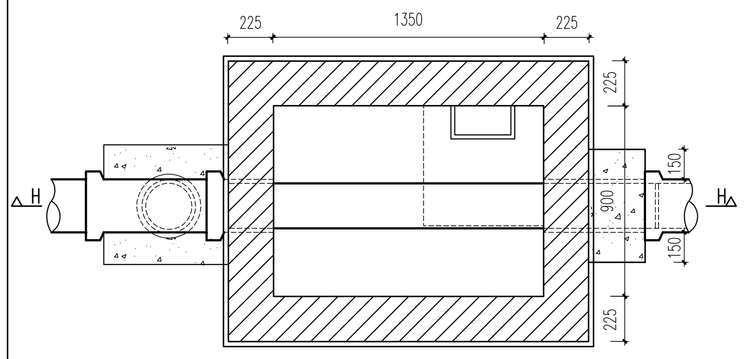

SECTIONAL PLAN

VERTICAL BACKDROP MANHOLE 1:20

SD-MH07

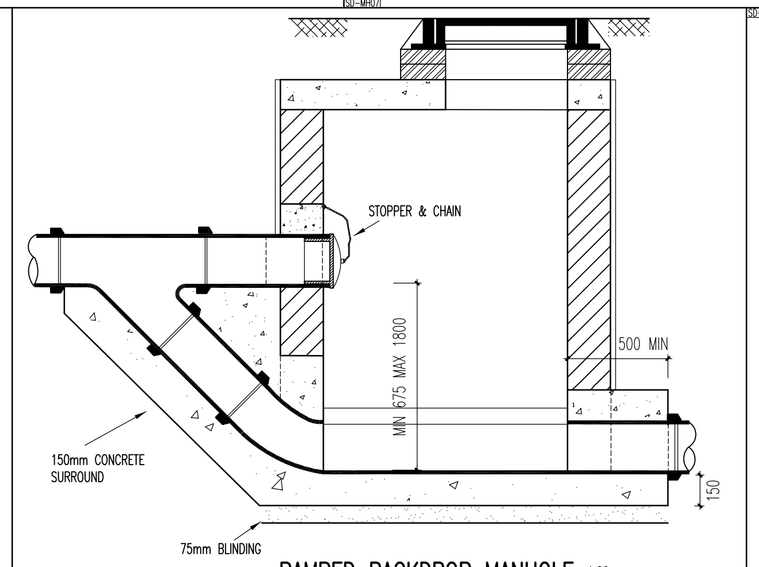

RAMPED BACKDROP MANHOLE 1:20

SD-MH05
SD-MH06

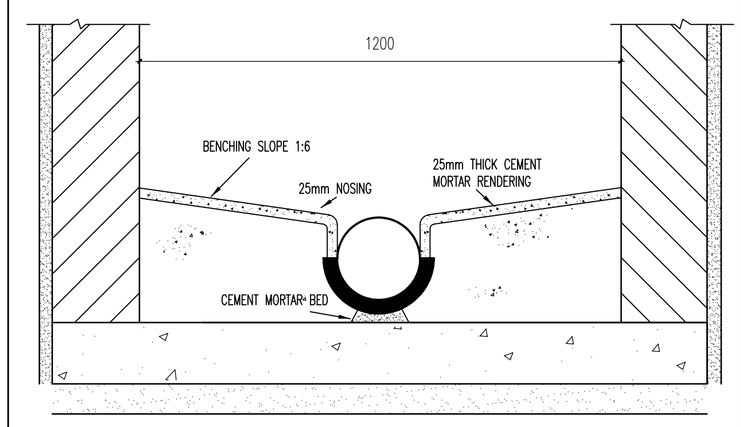

BENCHING DETAIL 1:10

SD-MH08

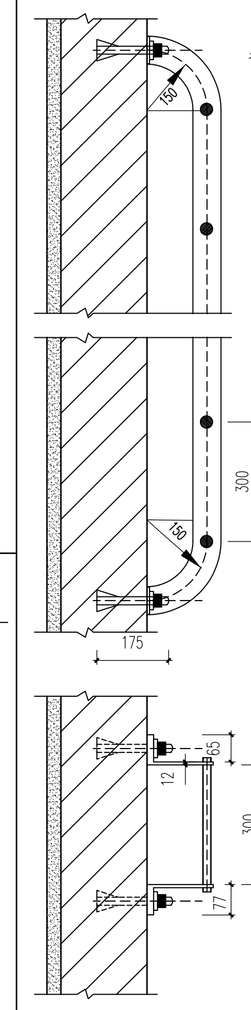

ACCESS LADDER DETAIL 1:10

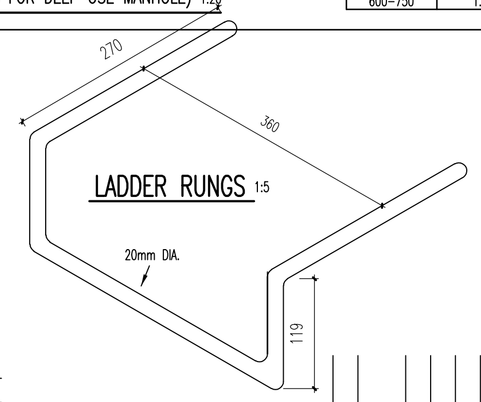

LADDER RUNGS 1:5

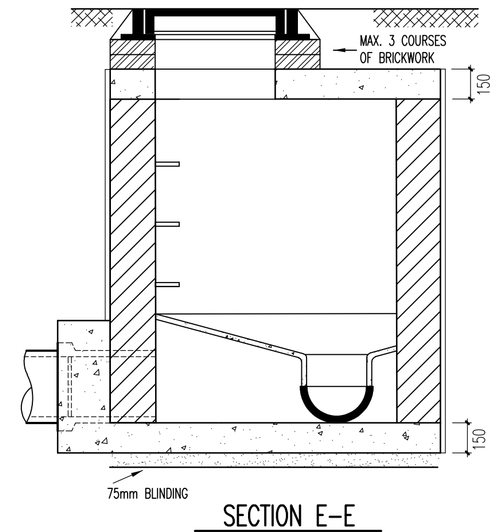

SECTION E–E

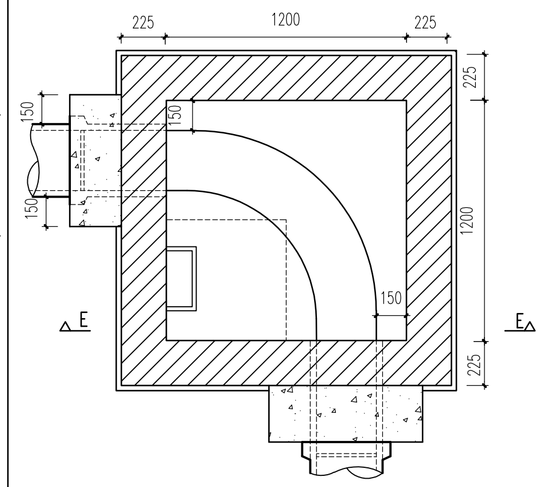

SECTIONAL PLAN

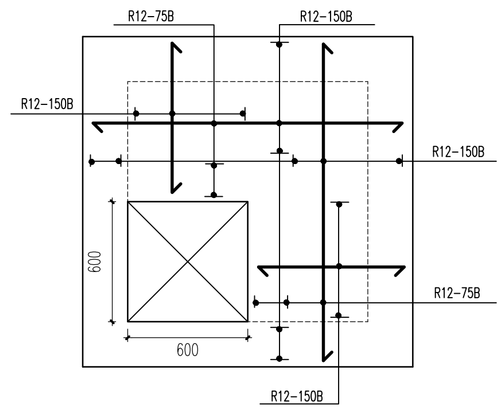

ROOF PLAN

CORNER MANHOLE (IF OVER 3.0m DEEP USE SHAFT AS FOR DEEP USE MANHOLE) 1:20

CORNER MANHOLE SIZES

PIPE DIA. mm	MANHOLE SIZE m
100–300	1.20 x 1.20
375–525	1.50 x 1.50
600–750	1.75 x 1.75

NOTES :

MANHOLE CONSTRUCTION

MANHOLES TO BE CONSTRUCTED IN SOLID CONCRETE BLOCKWORK TO I.S. 20 TYPE A MIN. 225mm THICK FOR DEPTHS UP TO 3.0m AND 350mm THICK FOR DEPTHS BETWEEN 3.0m and 6.0m.
PIPES 225mm DIA. AND OVER WHEN BUILT IN TO WALLS SHALL HAVE A R.C. LINTEL OVER THE PIPE TO THE FULL THICKNESS OF THE BLOCKWORK AND THE FULL LENGTH OF THE WALL. MANHOLE BASES AND SLABS TO BE CONSTRUCTED IN GRADE 20 CONCRETE. A FLEXIBLE JOINT SHALL BE TO PROVIDED TO EACH PIPE WITHIN 500mm OF THE INNER FACE OF THE MANHOLE WALL. PROJECTING PIPES SHALL BE SURROUNDED WITH GRADE 20 CONCRETE CAST MONOLITHICALLY WITH THE MANHOLE BASE. A FUTHER "ROCKER" PIPE SHALL ALSO BE PROVIDED FOR PIPES UP TO 450mm DIA. OF 500mm TO 750mm LENGTH, AND PIPES GREATER THAN 450mm DIA. OF 750mm TO 1000mm LENGTH.

COVERS

MANHOLE COVERS AND FRAMES TO COMPLY WITH I.S.261 OR B.S.497 COVERS IN ROADS TO BE GRADE A (HEAVY DUTY) 600mm DIA CLEAR OPENING. COVERS IN GRASSED AREAS AND FOOTPATHS NOT ADJACENT TO ROADWAYS TO BE GRADE B (MEDIUM DUTY) WITH 600mm DIA. OPENING.

LADDER RUNGS

LADDER RUNGS SHALL BE 20mm DIAMETER MILD STEEL HEAVILY GALVANISED AFTER MANUFACTURE AS SHOWN ON THE DRAWING AND FITTED AT 300mm CENTRES. LENGTH EMBEDDED IN WALL 125mm.

ACCESS LADDERS

ACCESS LADDERS TO BE MANUFACTURED FROM MILD STEEL WITH 65mm x 12mm STRINGERS 300mm APART WITH 20mm DIAMETER RUNGS AT 300mm c/c. MILD STEEL STAYS 65mm x 12mm TO BE PROVIDED AT INTERVALS NOT EXCEEDING 2.4m. LADDER AND STAYS TO BE HEAVILY GALVANISED TO BS 729 AFTER MANUFACTURE. THE LADDER IS TO BE FIXED WITH 18mm DIAMETER STAINLESS STEEL BOLTS.

BENCHING

BENCHING IS TO BE FORMED IN GRADE 30 CONCRETE AND SHOULD RISE VERTICALLY FROM THE TOP EDGE OF THE CHANNEL TO A HEIGHT NOT LESS THAN THAT OF THE SOFFIT OF THE OUTLET AND SLOPE UPWARDS TO MEET THE WALL OF THE MANHOLE AT A GRADIENT OF 1:6 (MIN. RISE 25mm). IT SHOULD BE FLOATED WITH A STEEL FLOAT TO A SMOOTH HARD SURFACE WITH A 25mm THICK COAT OF 1:1 CEMENT MORTAR LAID WHILE THE BENCHING CONCRETE IS STILL GREEN.

RENDERING

SURFACE WATER MANHOLES SHALL BE RENDERED EXTERNALLY IN 1:3 CEMENT MORTAR 25mm THICK AND FINISHED WITH A STEEL TROWEL. FOUL MANHOLES SHALL BE RENDERED INTERNALLY AND EXTERNALLY IN 1:3 CEMENT MORTAR.

Mark	Date	By	Chk.	App.	Revision
PL3	10-08-22	DOS			SHD PLANNING ISSUE

Drawing Status
SHD PLANNING ISSUE

Job Title
RESIDENTIAL DEVELOPMENT
AT SECTOR 3, AIKEN'S VILLAGE,
STEPASIDE, Co. DUBLIN

Drawing Title
MANHOLE DETAILS

Architect/Client
FERREIRA ARCHITECTS

KAVANAGH BURKE
CONSULTING ENGINEERS
Tel. 01 - 450 0694
Fax. 01 - 426 4340
Email: pkavanagh@kavanaghburke.ie
Unit G3, Calmount Pk.
Ballymount,
Dublin 12.

Drn. DOS	Checked	Approved
Scales NTS		Date 17-12-19
Job No. D1636	Drawing No. D5	Rev. PL3